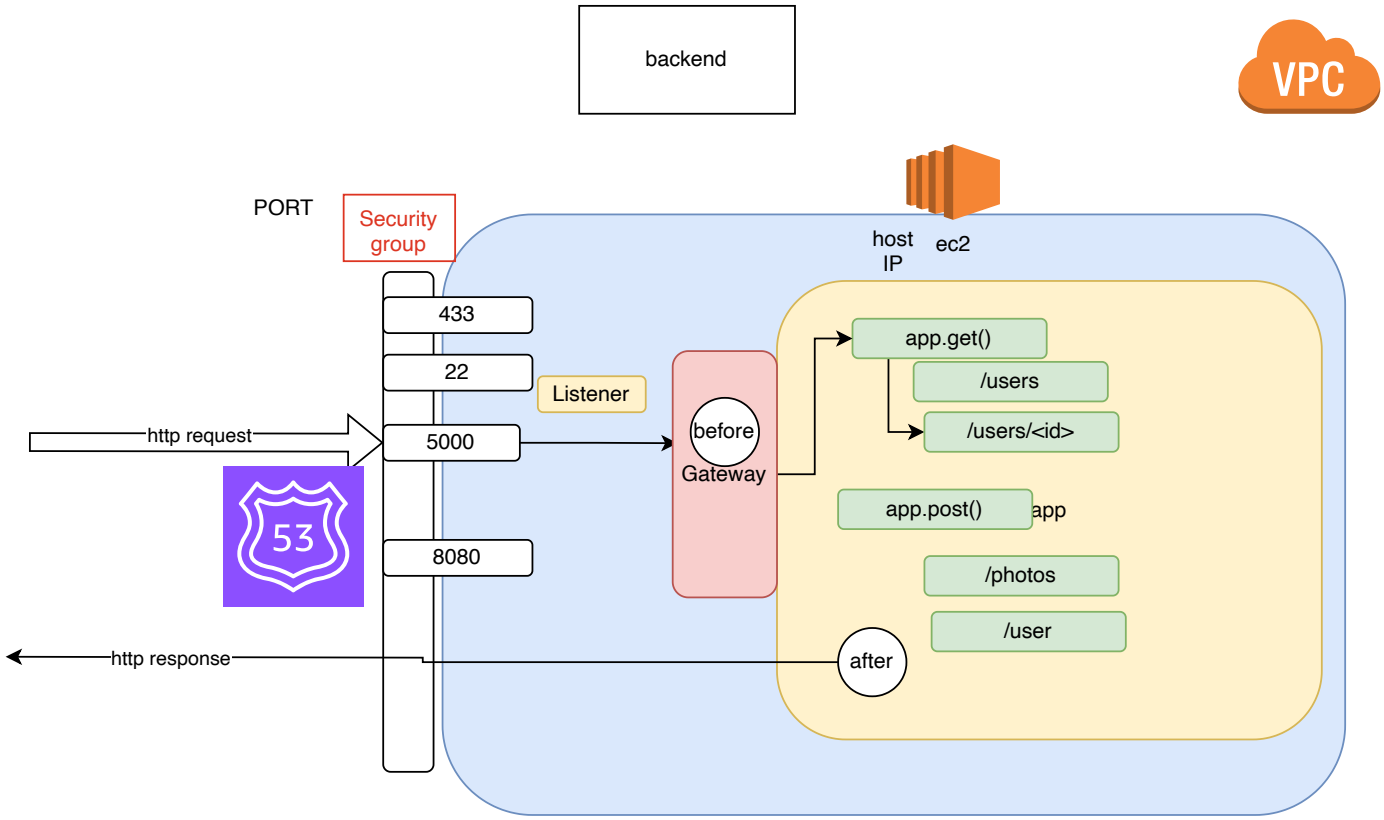
backend
VPC
PORT
Security group
host IP
ec2
433
22
Listener
http request
5000
53
8080
before
Gateway
app.get()
/users
/users/<id>
app.post()
app
/photos
/user
after
http response

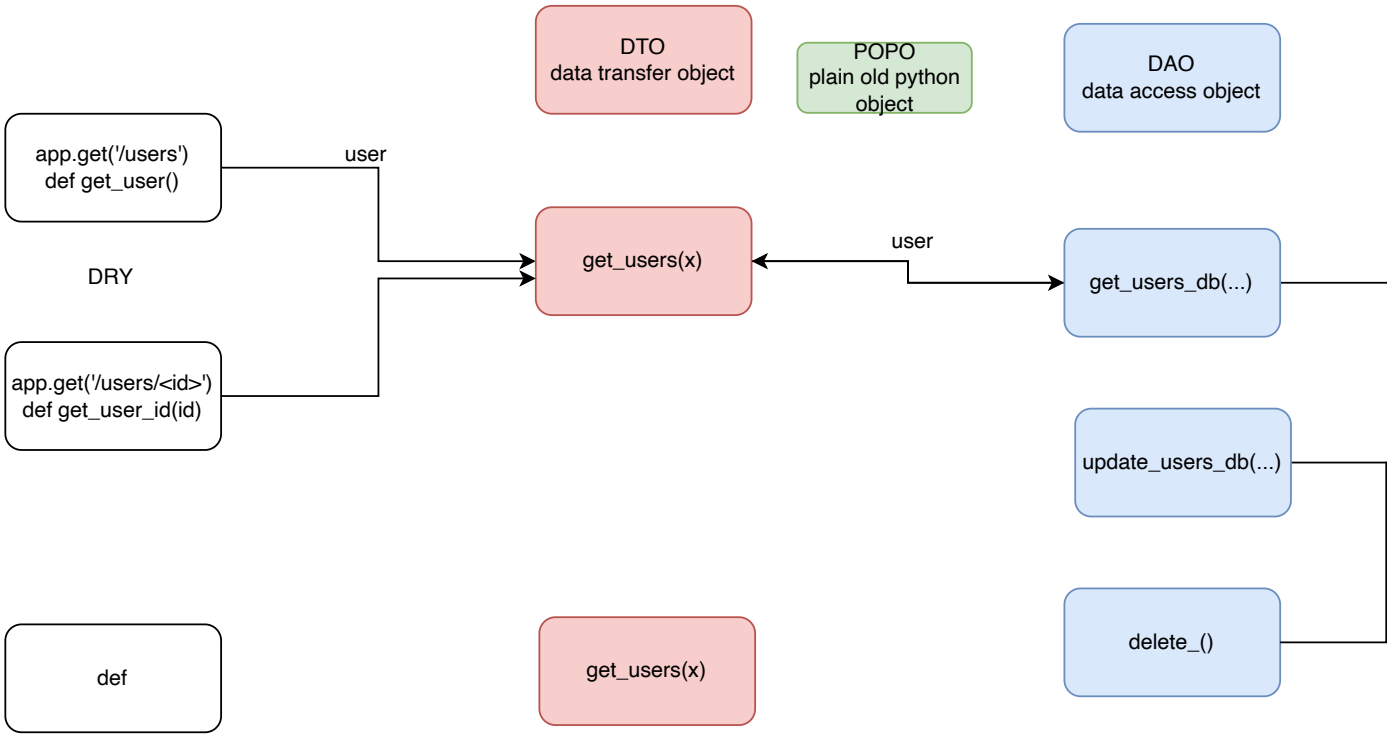
DTO
data transfer object
POPO
plain old python object
DAO
data access object
app.get('/users')
def get_user()
user
DRY
get_users(x)
user
get_users_db(...)
app.get('/users/<id>')
def get_user_id(id)
update_users_db(...)
delete_()
def
get_users(x)

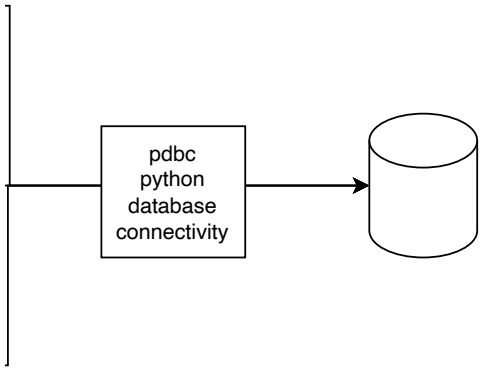
pdbc
python
database
connectivity

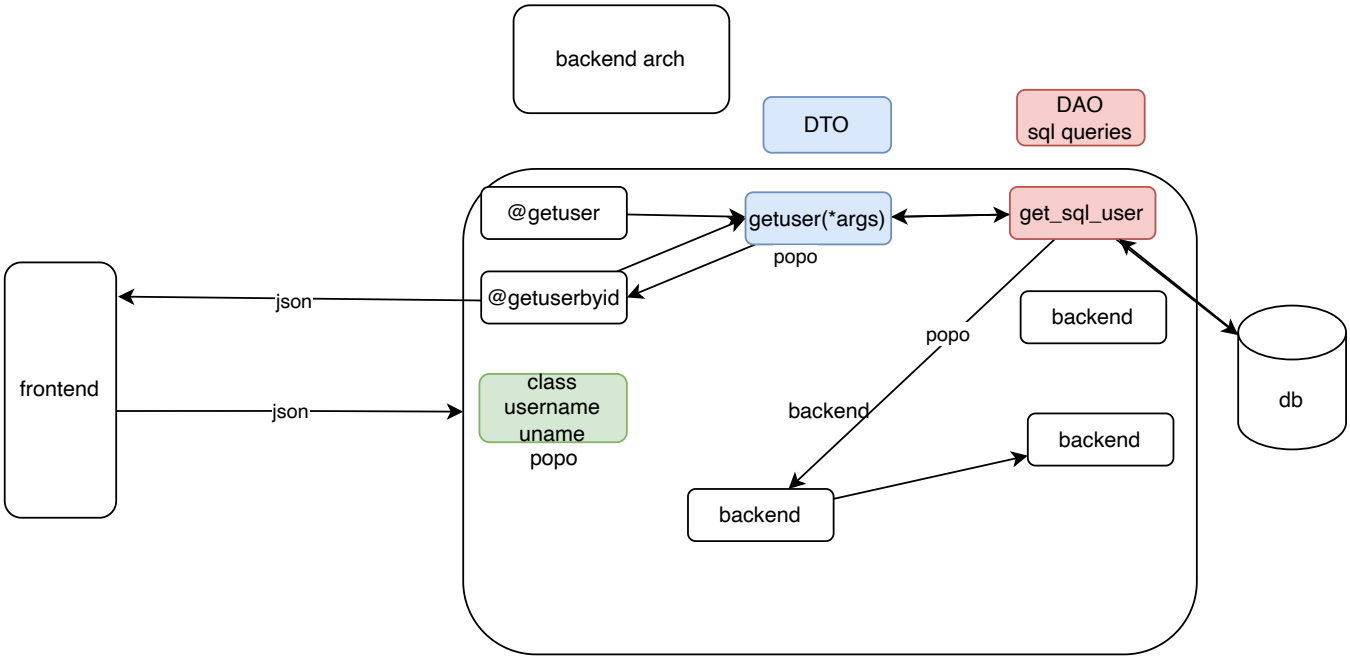


application

jolt

get all meals
get meal by id
add meal
delete meal
update meal

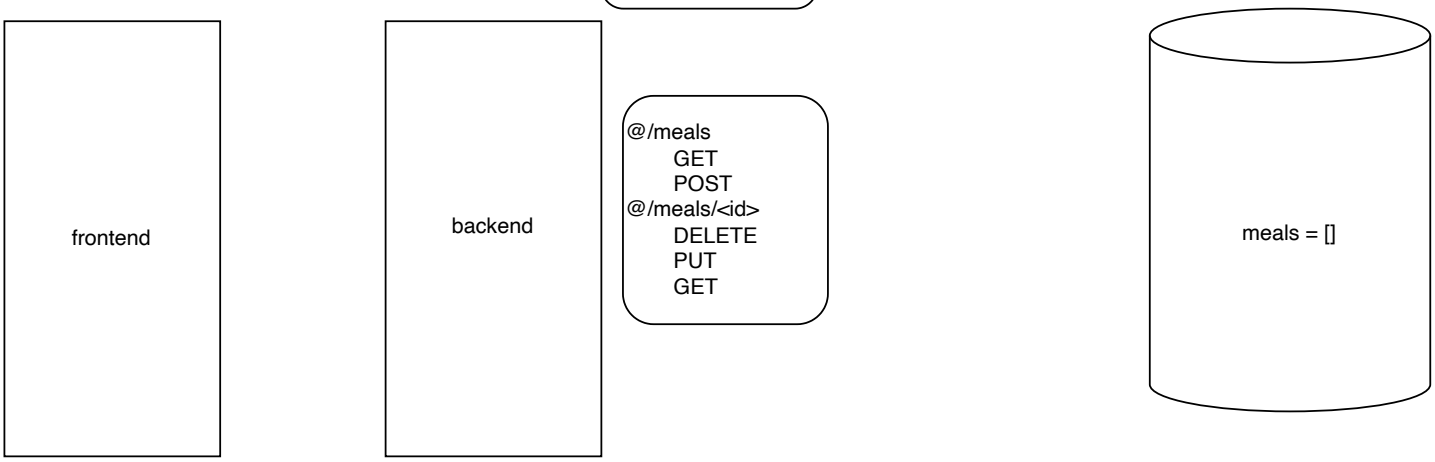

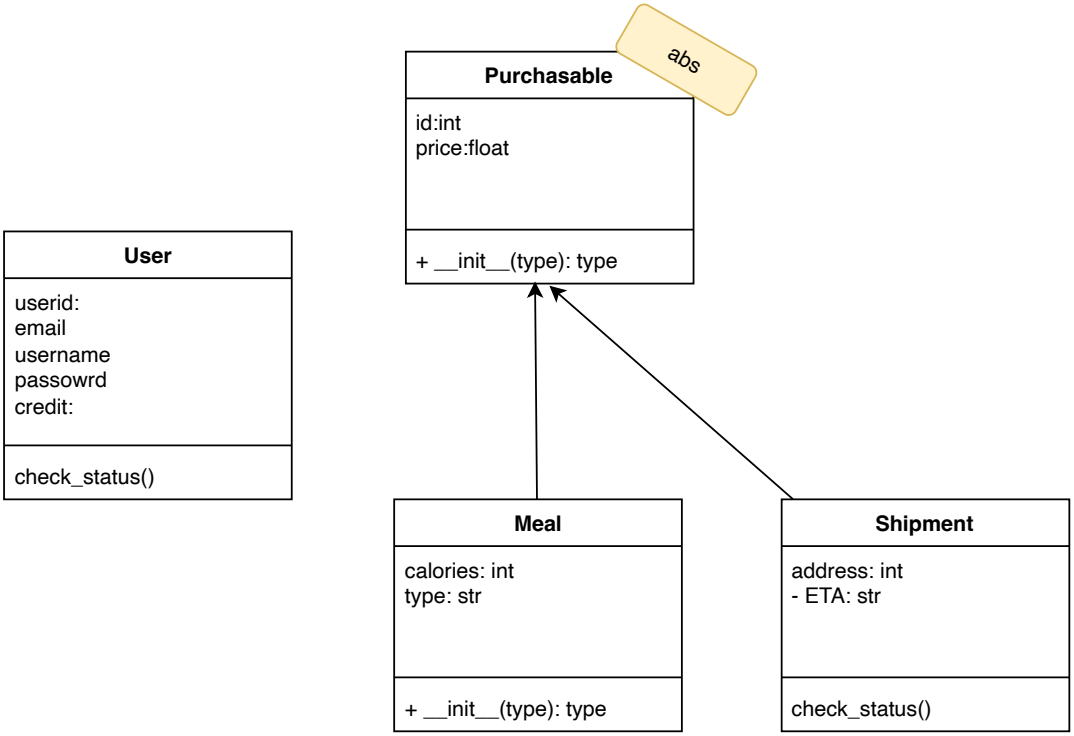
abs
Purchasable
id:int
price:float
+ __init__(type): type
User
userid:
email
username
passowrd
credit:
check_status()
Meal
calories: int
type: str
+ __init__(type): type
Shipment
address: int
- ETA: str
check_status()