Linux Networking Overview (OSI, DNS, IP, Routers/RIP, Traceroute, Network Types)

Each layer provides services to the layer above. Protocol examples are c

7. Application
HTTP/HTTPS, DNS, SSH, SMTP

6. Presentation
TLS/SSL, Encoding, Compression

5. Session
Session management, RPC concepts

4. Transport
TCP/UDP, Ports, Reliability

3. Network
IP, Routing, ICMP (ping)

2. Data Link
Ethernet, MAC, Switches, ARP

1. Physical
Cables, Wi-Fi radio, Signals

PAN (Personal Area Network)
1–10m. Bluetooth, tethering.

LAN (Local Area Network)
Home/office. Switches + Wi-Fi.

Network Types (PAN/LAN/MAN/WAN)

MAN (Metropolitan Area Network)
City-scale. ISP aggregation.

WAN (Wide Area Network)
Internet. Many routers + links.

Host IP: 192.168.10.25/24
Network: 192.168.10.0
Broadcast: 192.168.10.255
Gateway example: 192.168.10.1

IPv

CIDR (/24) means:
- first 24 bits are network
- remaining bits identify hosts
Same-LAN devices talk directly via L2 (MAC/ARP).
Off-LAN traffic goes to the default gateway (router).
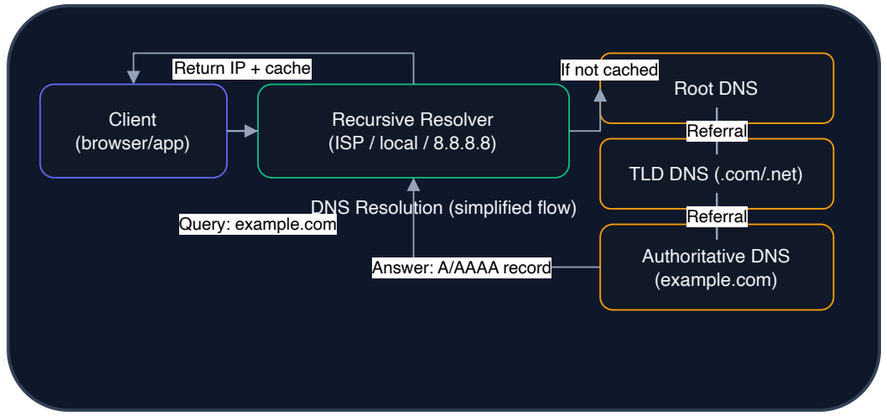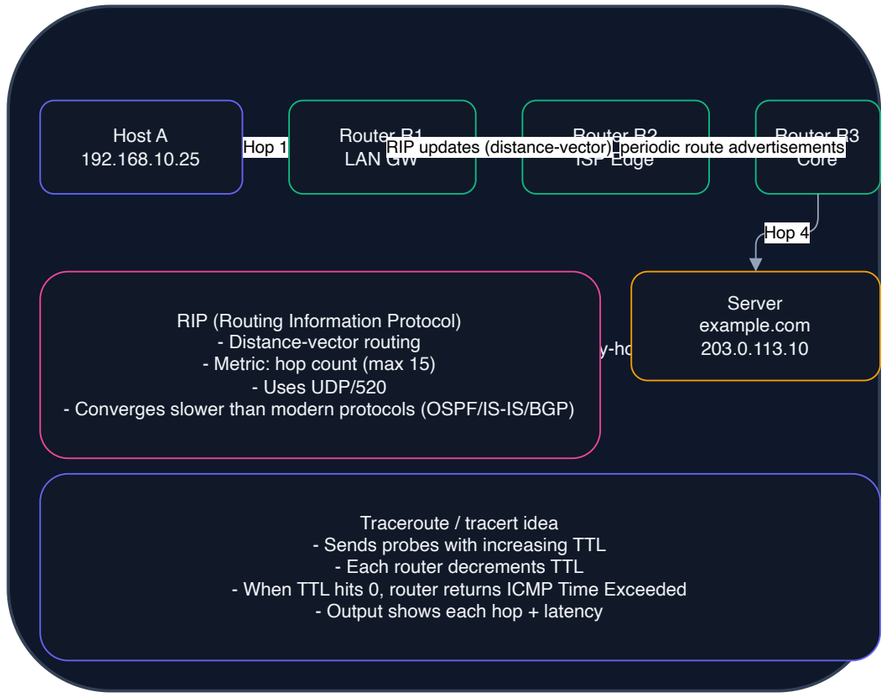
Linux commands
ip a / ip r
ss -tulpen
ping
dig / nslookup
traceroute / tracepath